HSMP-389Y

RF Switching PIN Diodes In Surface Mount SOD-523 Package

Data Sheet

Description/Applications

The HSMP-389Y of Avago Technologies is a PIN Diode that optimized for switching applications where low resistance at low current and low capacitance are required. It is housed in a miniature low cost surface mount SOD-523 package. This miniature package is particularly useful in the application where board space is the major concern.

A SPICE model is not available for PIN diodes as SPICE does not provide for a key PIN diode characteristic — carrier lifetime.

Features

- Space saving SOD-523 package
- Switching
  - Low Capacitance
  - Low Resistance at Low Current
- Tape and Reel Options Available
- MSL 1 & Lead Free

Package Marking and Pin Connections



Note: Package marking provides orientation and identification
"F" = Device Code
"?" = Month code indicates the month of manufacture

Table 1. Absolute Maximum Ratings [1] at Tc = +25°C

Symbol	Parameter	Unit	Max Rating
I_f	Forward Current (1 µs Pulse)	Amp	1
P_{IV}	Peak Inverse Voltage	V	100
T_j	Junction Temperature	°C	150
T_{stg}	Storage Temperature	°C	-60 to 150
θjb	Thermal Resistance [2]	°C/W	150

Notes:

1. Operation in excess of any one of these conditions may result in permanent damage to the device.
2. Thermal Resistance is measured from junction to board using IR method.

Table 2. Electrical Specifications at Tc = +25°C

	Minimum Breakdown Voltage V_{BR} (V)	Maximum Total Resistance R_S (Ohm)	Maximum Total Capacitance CT (pF)
	100	2.5	0.30
Test Conditions	VR = VBR Measure IR ≤ 10μA	I_F = 5 mA f = 100 MHz	V_R = 5V f = 1MHz

Table 3. Typical Parameters at Tc = +25°C

	Series Resistance Rs (Ohm)	Carrier Lifetime (ns)	Total Capacitance CT (pF)
	3.8	200	0.20
Test Conditions	I_F = 1 mA f = 100 MHz	I_F = 10mA I_R = 6mA	V_R = 5 V f = 1MHz

Typical Performance Curves at Tc = +25°C

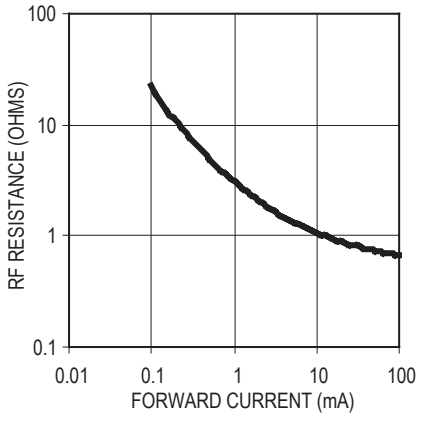

Figure 1. RF Resistance vs. Forward Bias Current

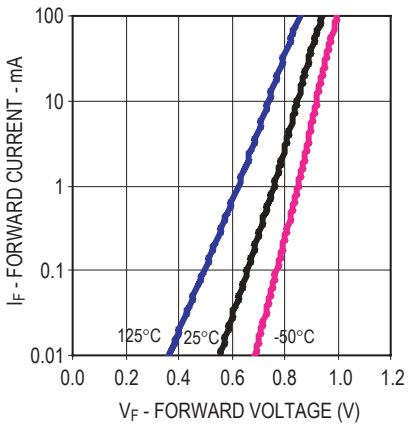

Figure 2. Forward Current vs. Forward Voltage

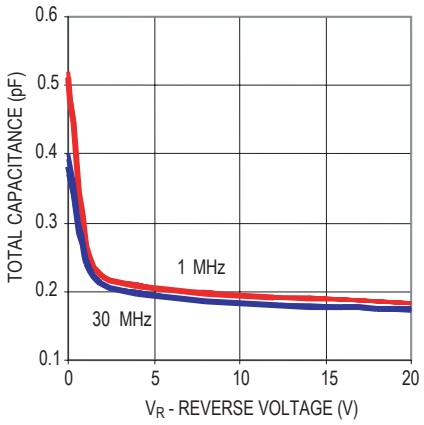

Figure 3. RF Capacitance vs. Reverse Bias

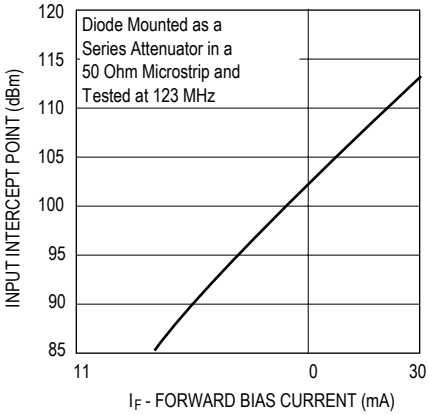

Figure 4. 2nd Harmonic Input Intercept Point vs. Forward Bias Current

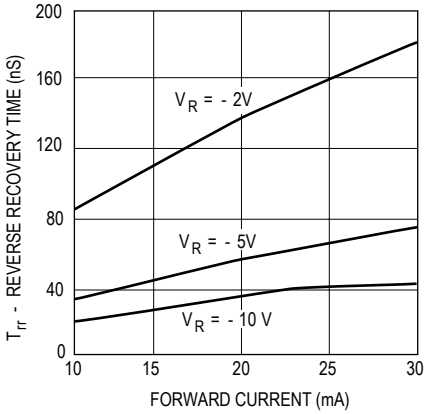

Figure 5. Typical Reverse Recovery Time vs. Reverse Voltage

Package Outline and Dimension

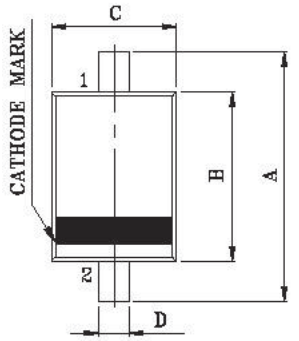

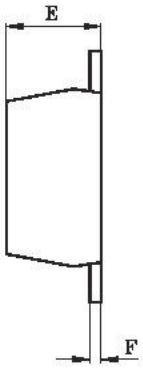

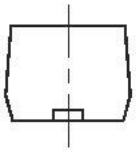

DIM	MILLIMETERS
A	1.60± 0.10
B	1.20± 0.10
C	0.80± 0.10
D	0.30± 0.05
E	0.60± 0.10
F	0.13± 0.05

PCB Footprint

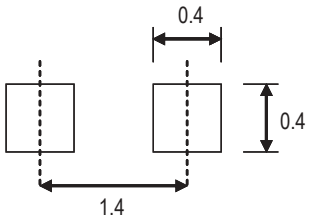

Unit : mm

Device Orientation

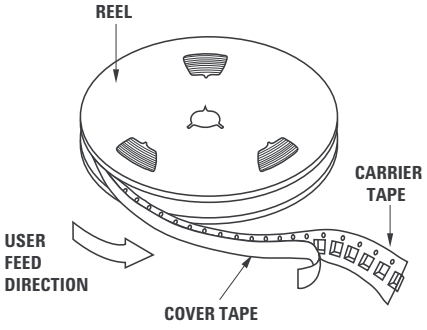

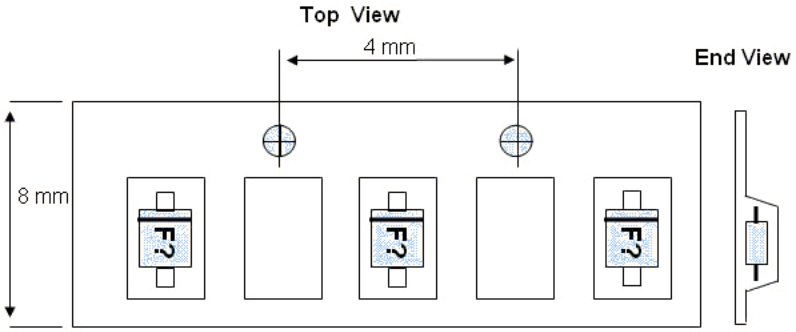

Tape Dimensions

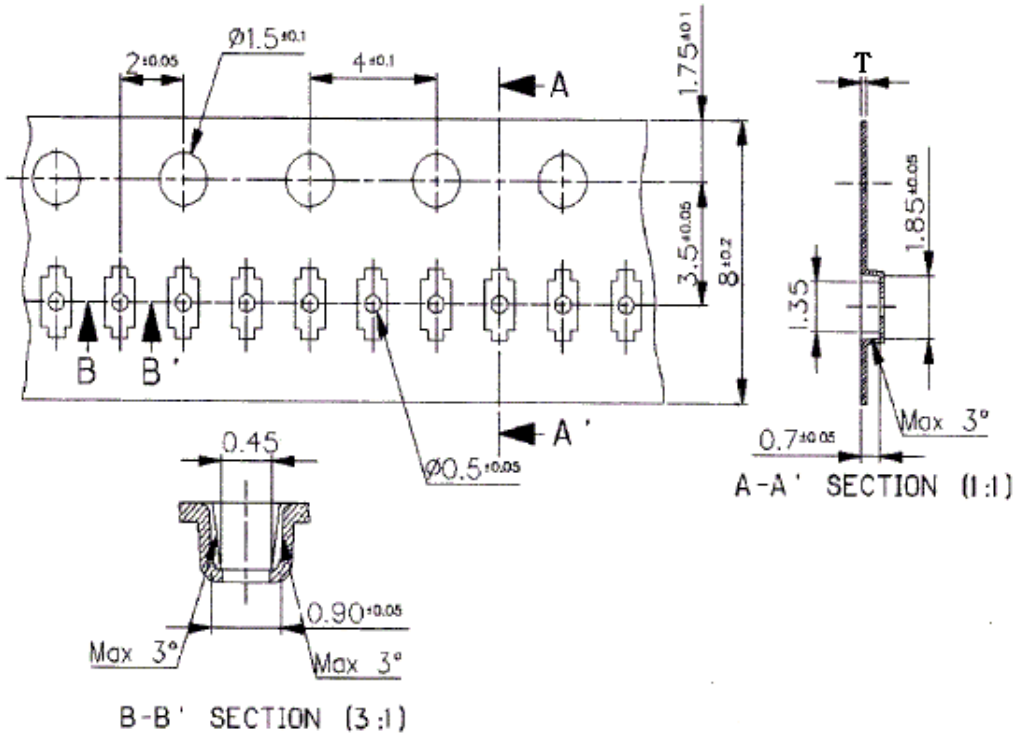

Specification < Unit : mm >
hole pitch : 50 Pitch Tolerance : 200 ± 0.3
General Tolerance : ± 0.1
Surface resistance : 104 ~ 108 Ω

Part Number Ordering Information

Part number	No. of Units	Container
HSMP-389Y-BLKG	100	Anti-static bag
HSMP-389Y-TR1G	3000	7" reel

For product information and a complete list of distributors, please go to our web site: **www.avagotech.com**

Avago, Avago Technologies, and the A logo are trademarks of Avago Technologies, Limited in the United States and other countries.
Data subject to change. Copyright © 2006 Avago Technologies Pte. All rights reserved.
AV01-0116EN - June 1, 2006